100x100mm Channel Floor Plate

Product Code: T311-055

Description

Galvanised square base plate, with welded 2-hole 90° bracket mounted. 90mm square.

Material

Mild Steel

Finish

Galvanised ≥ 50µm

Weight

531.0g

Pack Qty
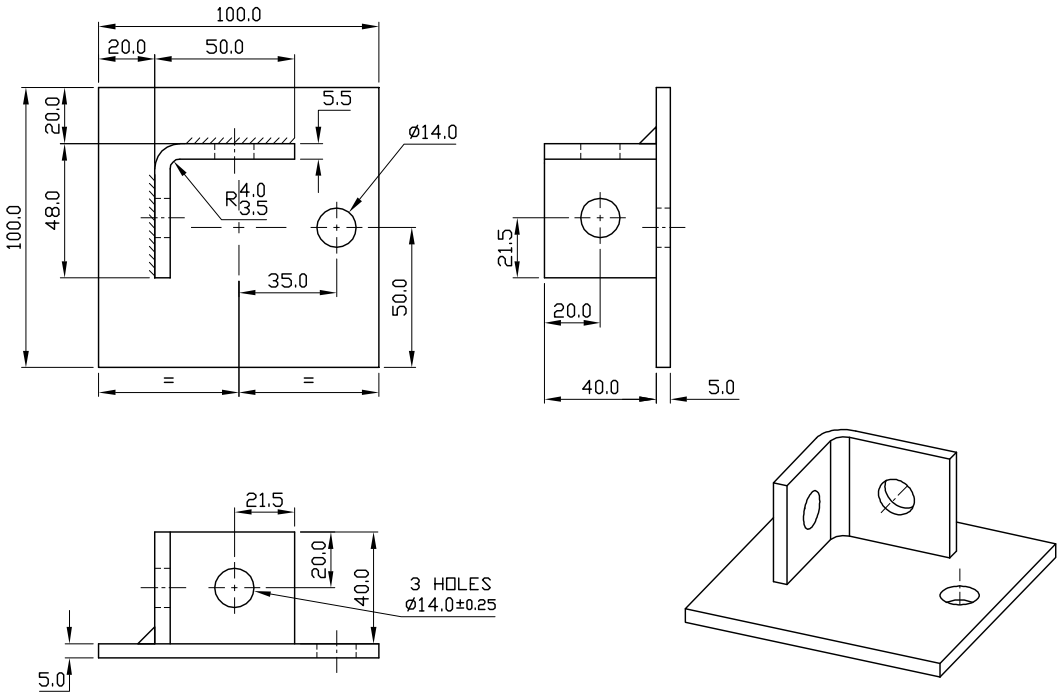
1